UNG
Shurtan GKM

"O'zbekneftgaz" AJ
"Shurtan gaz kimyo majmuasi" MCHJ
MTRB xizmati
RO'YXATGA OLINDI
074/001-1705-2
2022 yil "14" 02

"APPROVE"
Chairman of the Expert-
Technical Commission of
«Shurtan GCC», LLC
_____
"___" _____ 2022 y

TECHNICAL ASSIGNMENT
for purchasing of Centrifugal-cast radiant tubes
for pyrolysis furnace BA-1103
for the needs of Shurtan GCC, LLC

«SGCC», LLC - 2022 y.

1. GENERAL INFORMATION

1.1 Description and characteristics.

Centrifugal-cast radiant tubes for pyrolysis furnace BA-1103. (Type of pyrolysis furnace: SRT-VI.)

1.2 Basis and purpose of purchasing.

Basis: Annual application for 2022.

The purpose: to replace the existing centrifugal-cast radiant tubes (operation period is 6 years) of the pyrolysis furnace BA-1103 to ensure uninterrupted operation of the hot section unit of the Ethylene production shop.

1.3 Information on novelty (production/manufacture year of equipment).

The delivered goods must be new, produced no earlier than 2022 (which was not in use, was not restored, which has not restored its consumer properties).

1.4 Development/Fabrication Steps.

The contractor for the supply of centrifugal-cast radiant tubes and the technical documentation for them shall be the companies that will fulfill all the requirements of item 4.1. of this Technical assignment. All developed technical documentation shall be provided in Russian.

1.5 Documents for Development/Fabrication.

The Contractor shall approve the set of technical documentation (drawings, materials (alloys), etc. of each position as per item 4.1) with the Customer before manufacturing of the centrifugal-cast radiant tubes.

2. SCOPE OF USE

This Technical assignment establishes the technical requirements for the purchase of centrifugal-cast radiant tubes for the pyrolysis furnace BA-1103 of the hot section unit of the Ethylene production shop. The pyrolysis furnace is BA-1103 designed to produce pyrogas by means of thermal decomposition of raw hydrocarbons.

3. OPERATING CONDITIONS

3.1 General Operating Conditions.

The operation mode of the pyrolysis furnace BA-1103 is continuous.

The hot section of ethylene unit stops for repair 1 time per year for 15 days.

"Shurtan gaz kimyo majmuasi" MCHJ MTRB xizmati O'zR. K.
TEXNIK TOPSHIRIQ VA TEXNIK XULOSALAR UCHUN

Operating parameters of the process mode: Pyrogas flowrate: 18t/h, Pressure: 60 kPa, Temperature: +850 C.

4. TECHNICAL REQUIREMENTS

4.1 Technical parameters of the existing radiant tubes.				
№	Name	Technical parameters	Drawing №	Material (alloy)
1	Centrifugal-cast radiant tube	Centrifugal spun tube – 63,5mm OD x6.4. MW x 11590mm long. **Part №12001.**	BD6-2143-BA120-1	25Cr-35Ni+Nb Micro alloy. TS-BA 1.2.5 XM or Equal. (Cr=24÷27%, Ni=34÷37%, Nb=1,0÷1,5%.)
2	Centrifugal-cast radiant tube	Centrifugal spun tube – 63,5mm OD x6.4. MW x 2725mm long. **Part №12002.**	BD6-2143-BA120-1	35Cr-45Ni+Nb Mic. Alloy. TS-BA 1.2.1XTM or Equal. (Cr=34÷37%, Ni=44÷46%, Nb=1,0÷1,5%.)
3	Centrifugal-cast radiant tube	Centrifugal spun tube – 114,3mm OD x6.4. MW x 13850mm long. **Part №12004.**	BD6-2143-BA120-1	35Cr-45Ni-Nb. Mic. Alloy. TS-BA 1.2.1 XTM or Equal. (Cr=34÷37%, Ni=44÷46%, Nb=1,0÷1,5%.)
4	Centrifugal-cast radiant tube	Centrifugal spun tube – 114,3mm OD x6.4. MW x 1314mm long. **Part №12005.**	BD6-2143-BA120-1	25Cr-37Ni+Nb 0.1 C. TS-BA 1.1.7 or Equal. (Cr=24÷27%, Ni=36÷38%, Nb=1,0÷1,5%.)

* The manufacturer is obliged to manufacture the required centrifugal cast radiant tubes in full compliance with all dimensions specified in the drawings attached on 4 sheets to this technical assignment, as well as in full compliance with the chemical composition of the manufactured radiant tubes, which should not be lower than these indexes specified in section 4.1 of this technical assignment.

4.2. BA-1103 pyrolysis furnace Specifications

Table №1.

Type of pyrolysis furnace: SRT-VI.

Parameter name.	Unit of measurement	Quantity
Number of coils	piece	4
Decoking Process Duration	day (24 hours)	1
Feed inlet flow rate (ethane + steam per one pyrolysis furnace)	Kg/h	22821

"Shurtan gaz kimyo majmuasi" MCHJ MTRB xizmati O'zR FTGAZ AJ TEXNIK TOPSHIRIQ VA TEXNIK XULOSALAR UCHUN

Feed inlet flow rate (ethane + steam per one coil)	Kg/hr	4145÷5706
Feed temperature at the radial coil inlet	° C	Not above than 700
Feed pressure at the radiant coil inlet	kPa	Not above than 280
Pyrogas operating temperature at radiant coil outlet	° C	810 ~ 830
Pyrogas temperature at the radiant coil outlet	° C	Not above than 880
Pyrogas pressure at the radiant coil outlet	kPa	Not more than 61
Pressure in the furnace hearth (furnace draft)	kPa	Minus 50÷minus 10
Flue gas temperature in the lower zone of the radiant part	° C	Not above than 1183
Flue gas temperature in transition zone of the radiant part	° C	Not above than 1183
Fuel gas flow rate to bottom burners	kg/hr	2577÷2712
Fuel gas flow to wall burners	kg/hr	0÷529
Bottom burners "staged flat flame" model PLSFFG (John Zink).		
Draft type is forced	pcs.	24
Wall burners of radiant model LUM-F (John Zink).		
Draft type is unforced	pcs.	24

Table № 2.

Product name	Composition mole fraction,%,:	Control methods (analyzing technique)	
Feedstock saturated with ethane from the DA-1102 saturator.	carbon dioxide	0,01	LTC-GC-100, chromatographic
	methane	0.2	
	ethylene	0.13	
	ethane	65.89	
	propylene	0.13	
	propane	0.26	
	Steam/Water Пар/вода	33.38	

Table № 3			
Product name	Composition mole fraction,%,:		Control methods (analyzing technique)
Composition of pyrogas from primary quench exchanger along the EA-1101A, B, C, D.	Hydrogen	26,38	LTC-GC-115
	Carbon monoxide	0,09	
	Carbon dioxide	0,03	
	Methane	2,85	
	Acetylene	0,18	
	Ethylene	26,15	
	Ethane	19,24	
	Propadien	0,02	
	Propylene	0,31	
	Propane	0,07	
	Butadiene	0,23	
	Butylenes	0,05	
	Butanes	0,06	
	Fraction C_5	0,05	
	Fraction C_6+C_8 (non-aromatic).	0,03	
	Benzene	0,04	
	Toluene	0,01	
	Water	24,21	

4.3 Reliability requirements.

Radiant tubes shall have dimensions and connection dimensions allowing their installation in the existing furnace BA-1103.

The following documents shall be submitted in the technical and commercial proposal:

• The Contractor shall provide all technical documentation (dimensions of radiant tubes and grades of steels and alloys) in Russian;

• The Contractor shall provide a reference-list concerning of such radiant tubes as per the project of the pyrolysis furnace SRT-VI ABB Lummus; The Contractor and the Manufacturer shall provide relevant documentation demonstrating the experience in such project.

• The Contractor is obliged to provide a document on the manufacturer's blank form that specifies the terms for fulfilling the warranty obligations;

• The Contractor shall provide a quality guarantee for the goods in accordance with the manufacturer's guarantee;

• Certificates of materials (alloys) with chemical composition and mechanical properties shall be provided.

• If the above documents are not provided in the technical proposal, this technical proposal will be considered to be inconsistent. Documents that are not submitted will not be requested again.

4.4 Design requirements, installation and technical requirements.

Surfaces of tube elements intended for welding or mechanical connection with other parts shall be machined (edged, polished) in accordance with the manufacturer's requirements.

4.5 Marking Requirements.

Marking shall comply with the requirements of generally accepted or international standards.

On each tube, on the outer surface, a clear marking shall be applied, containing:

- name of the manufacturer;
- serial number;
- year of manufacture;
- steel grade (alloy);
- Heat No. (number);
- weight;
- overall dimensions.

4.6 Requirements for dimensions and packing.

Radiant tubes are laid on cradles. Tube holes shall be plugged with plugs and weld edges shall be protected from mechanical damage. During tying up of the tubes, contact of wire with tubes is not allowed. Technical and shipping documentation shall be packed in a bag

made of polyethylene film and put in a case. It is allowed to send documentation by mail upon agreement with the customer. Each cargo item must have its own packing list, which is inserted into a bag of waterproof paper. The bag is additionally wrapped in waterproof paper and placed in a special pocket made in accordance with the documentation used at the manufacturer. Other types of packages provided for this type of goods are allowed, ensuring the integrity of the goods during transportation.

5. REQUIREMENTS AS PER DELIVERY AND ACCEPTANCE RULES

5.1 Delivery and Acceptance Procedure

The Contractor shall provide familiarization with the technology of production of centrifugal casting tubes, ensure participation in the pre-shipment inspection of manufactured tubes, all costs during the pre-shipment inspection by the Customer are carried out at the expense of the Contractor.

Centrifugal-cast radiant tubes shall pass pre-shipment inspections (checks and tests) at the manufacturer's territory with the presence of technical specialists of "SGCC", LLC in the following scope:

- hydraulic tests;
- mechanical tests;
- tests by non-destructive test methods.

The Contractor shall also provide familiarization with the technology of production of centrifugal casting tubes by technical specialists of "SGCC", LLC, all costs during pre-shipment inspection shall be performed at the expense of the Contractor.

Acceptance tests of radiant tubes on the customer's territory shall be carried out in the following scope:

- check of dimensions;
- surface quality control;
- completeness control;
- control of the presence, content and location of the marking;
- packaging control.

In case of non-compliance with the quantity and quality of the supplied goods during the acceptance test, the Contractor shall replace, if possible, non-conforming goods in a short time. All costs associated with the replacement of non-conforming goods (including transportation costs, costs for customs clearing of exports and imports, VAT, obtaining certificates and permits, etc.) shall be carried out at the expense of the executor of the goods.

5.2 Requirements for handing-over of technical and other documents to the customer during delivery of goods.

The required technical documentation shall be in Russian.

During delivery, the Contractor shall submit the following documents confirming compliance of the products offered by him with the established requirements:

- manufacturer's quality certificates;
- contractor is obliged to provide the report of " Design Proof Test " from a certified International Independent Third Party;
- pre-shipment inspection report of control in the process before shipment of radiant tubes at the manufacturer;
- certificate confirming of the originality of the supplied products;
- the compliance certificate.

Technical documentation:

- Passport - 1 copy.

The passport shall contain:

- name of the supplying organization and its location;
- dimensions of radiant tube and grade of steels and alloys;
- writing-out from certificates for basic and filler materials;
- Heat number and number of radiant tube;
- results of short-term and long-term strength tests;
- results of hydraulic tests;
- packing certificate;
- operating and installation instructions.

6. TRANSPORTATION REQUIREMENTS

During transportation, as well as during unloading and loading operations of radiant tubes, measures shall be taken to minimize bending stresses and prevent the formation of cracks in them. During unloading and loading of radiant tubes and use crossbeams with attachment points confirmed by corresponding strength calculations. During internal shop transportation of radiant tubes use roller tables, roller supports and rollover fixture. Radiant tubes can be transported by any type of transport in accordance with the acting

rules on each type of transport. During transportation, the tube packs are separated by wooden gaskets. Wooden gaskets are laid on the floor of the platform or body of the car.

7. STORAGE REQUIREMENTS

During storage, it is necessary to ensure the safety of the goods from mechanical damage and climatic effects.

8. REQUIREMENTS FOR SCOPE AND/OR DURATION OF GUARANTEES

The Contractor shall provide on the manufacturer's blank form a document specifying the terms for performance of warranty obligations.

Subject to the requirements for operation, the Contractor guarantees the serviceable operation of radiant tubes during the warranty period of operation. The warranty service life of radiant tubes shall be at least 12 months (service life of at least 6 years from the start-up of the pyrolysis furnace) from the date of commissioning of the pyrolysis furnace or 18 months from the moment of receipt of radiant tubes at the warehouse of "Shurtan Gas Chemical Complex", LLC.

During the warranty period, the Contractor shall replace radiant tubes that have failed at his own expense, provided that the defect (breakdown) occurred not due to the fault of the Customer (subject to operation in the ones specified in item 4.2).

The procedure for detecting of defects of radiant tubes shall be carried out in the following order:

- visual inspection of coils;
- measurement of basic dimensions;
- tests by non-destructive test methods.

9. CLASSIFICATION QUALITY REQUIREMENTS

It is allowed to supply radiant tubes in terms of quality and characteristics not exceeding or exceeding the requirements specified in this technical assignment, manufactured using new innovative materials and technical solutions.

The product shall be of high quality and meet the requirements of its purpose, having the necessary consumer properties and technical characteristics, environmental and industrial safety characteristics. The quality of the goods must be confirmed by a quality certificate issued at the manufacturer's factory.

10. REQUIREMENTS FOR QUANTITY, COMPLETING, LOCATION AND DELIVERY PERIOD (PERIODICITY)

№	Name of Spare Parts	Technical parameters	Quantity
1	Centrifugal-cast radiant tube	Outer diameter - 63.5 mm, wall thickness - 6.4 mm, length - 11590 mm.	68 pcs
2	Centrifugal-cast radiant tube	Outer diameter - 63.5 mm, wall thickness - 6.4 mm, length - 2750 mm.	68 pcs
3	Centrifugal-cast radiant tube	Outside diameter - 114.3 mm, wall thickness - 6.4 mm, length - 13850 mm.	18 pcs
4	Centrifugal-cast radiant tube	Outside diameter - 114.3 mm, wall thickness - 6.4 mm, length - 1314 mm.	18 pcs

Terms of delivery: within 9 months from the date of opening of the letter of credit/prepayment.
- for non-residents of the Republic of Uzbekistan - DAP (DDP) according to Incoterms 2020;
- for residents of the Republic of Uzbekistan as per the terms of delivery up to the customer's warehouse.

One single delivery in full volume.
Railway delivery: railway station Kengsoy (station code - 732602), "Uzbekistan Temir Yullari", SJSRC.
Transport delivery: Republic of Uzbekistan, Kashkadarya region, Guzar district, Shurtan settlement, 180300.

11. REQUIREMENT FOR THE FORM OF INFORMATION PROVIDED

Text information shall be provided in Russian and/or English, in paper and electronic version (1 copy).

12. LIST OF ANNEXES

№	name OF ANNEXES Наименование приложения	Page number/Number of sheets
1	Drawing of the existing radiant tubes.	5 sheets.

Developers:

Deputy Chief Mechanical engineer: _____ M. Salaev
Engineer of the Chief Mechanical engineer department: _____ F. Botirov
Leading engineer of the Material and
technical resource management service: _____ U. Khidirov
Chief of the Ethylene production shop: _____ O. Murtazaev
Senior Mechanical engineer of the Ethylene production shop: _____ F. Nurmatov
Pyrolysis Furnace Process engineer: _____ T. Khasanov
Mechanical engineer of the unit: _____ B. Aminov

Перевод: Мустаровой Натальи

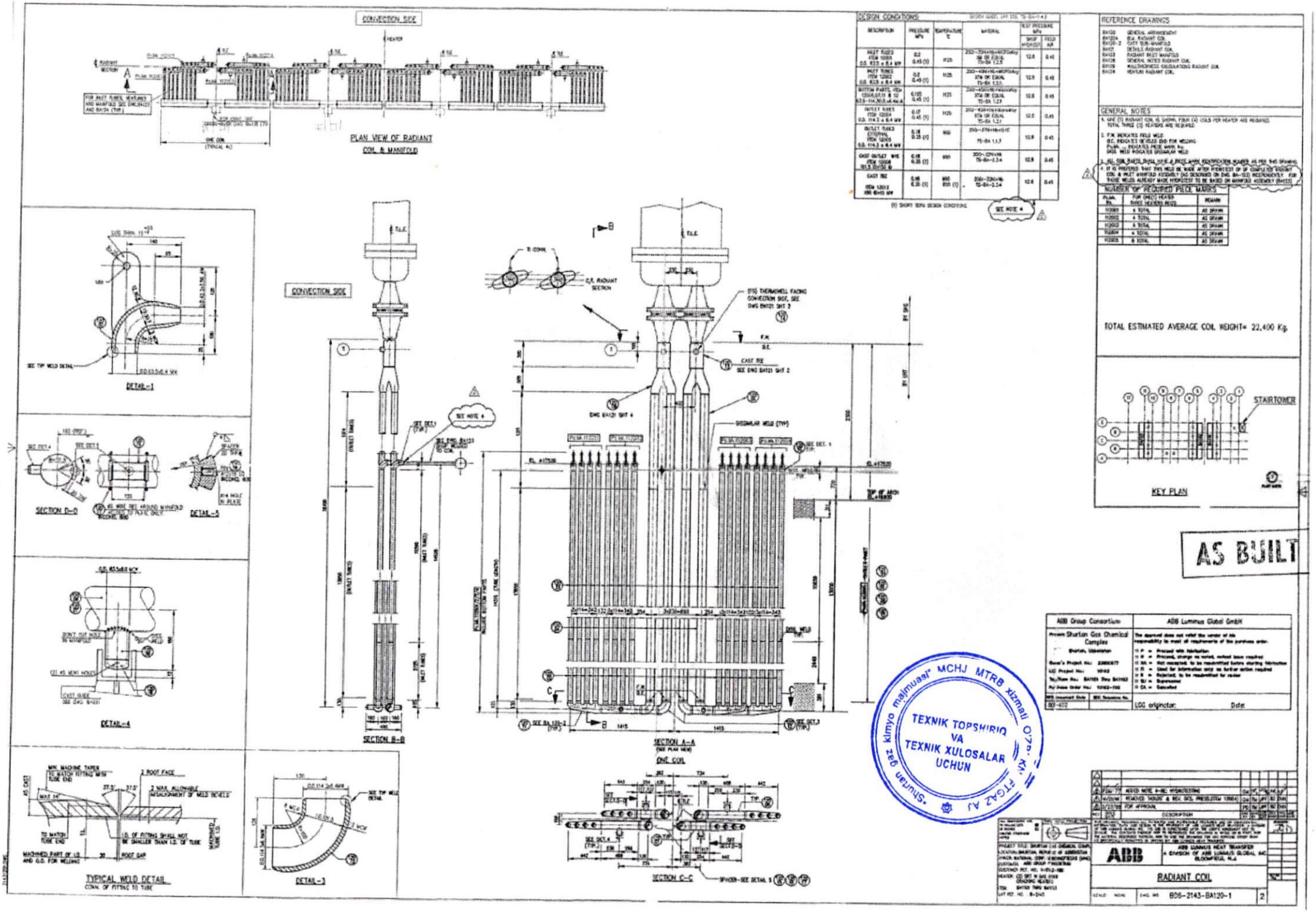
CONVECTION SIDE
PLAN VIEW OF RADIANT COIL & MANIFOLD
DESIGN CONDITIONS
REFERENCE DRAWINGS
GENERAL NOTES
NUMBER OF REQUIRED PIECE MARKS
TOTAL ESTIMATED AVERAGE COIL WEIGHT= 22,400 Kg.
KEY PLAN
STAIRTOWER
DETAIL-1
SECTION D-D
DETAIL-5
DETAIL-4
SECTION B-B
SECTION A-A
ONE COIL
SECTION C-C
DETAIL-3
TYPICAL WELD DETAIL
AS BUILT
TEXNIK TOPSHIRIQ VA TEXNIK XULOSALAR UCHUN
ABB
RADIANT COIL
BD6-2143-BA120-1

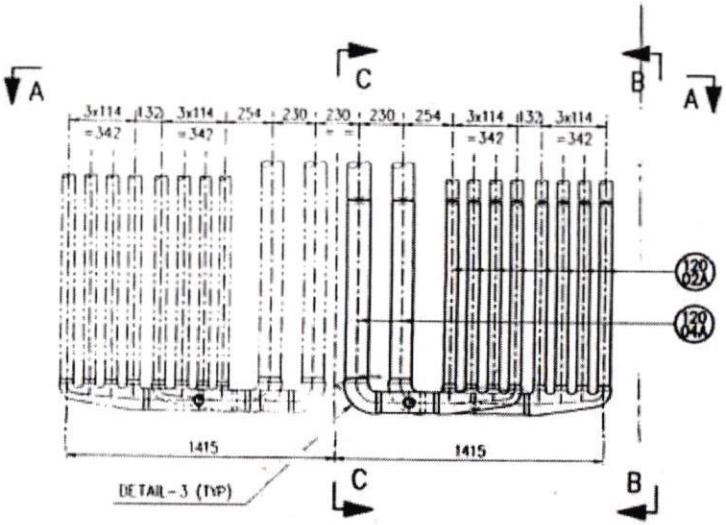

ELEVATION

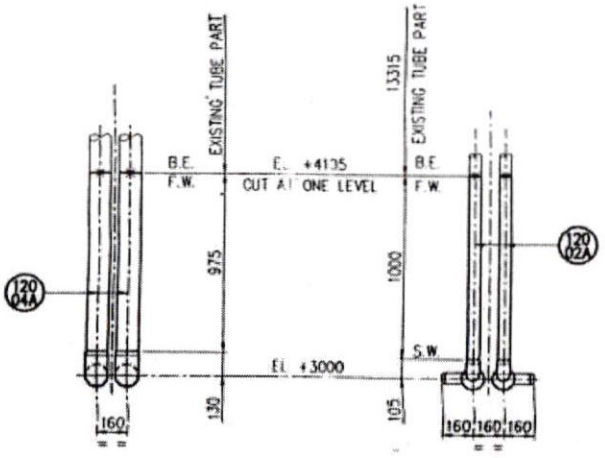

SECTION C–C

SECTION B–B

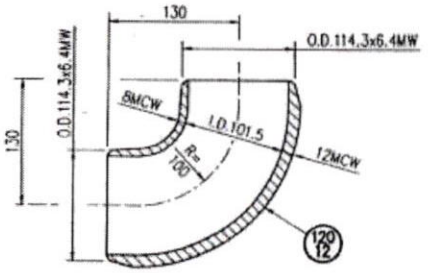

DETAIL–3

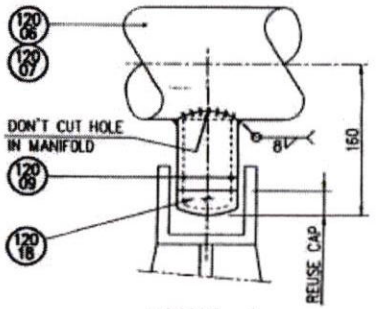

DETAIL–4

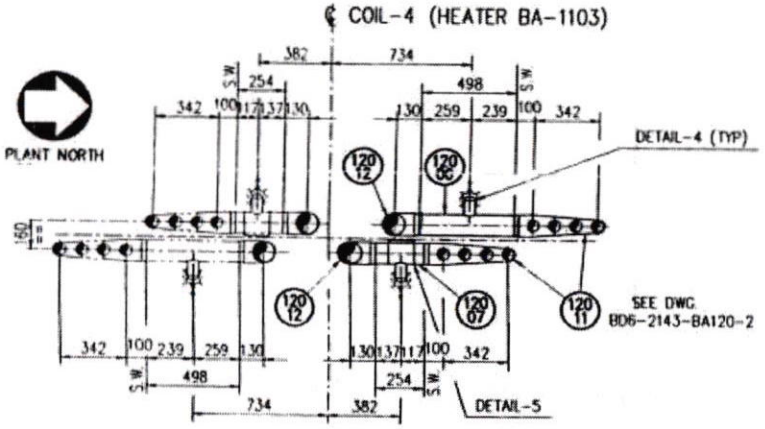

SECTION A–A

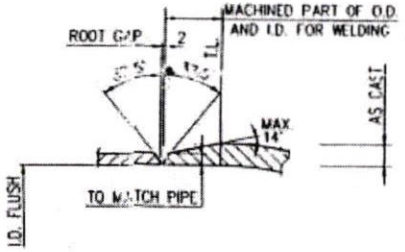

TYPICAL RECOMMENDED WELD DETAIL

CONNECTION OF TUBE TO FITTING

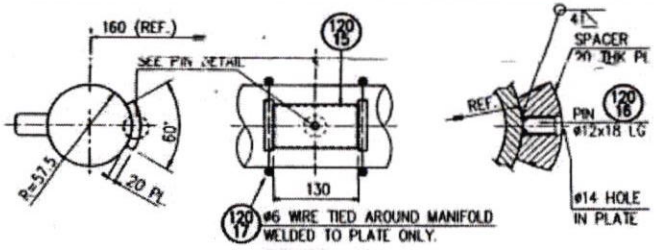

DETAIL–5

GENERAL NOTES

1. THIS DRAWING IS TYPICAL FOR BOTTOM COIL MANIFOLD REPLACEMENT
   2x MANIFOLDS ARE DRAWN
   2x NEW MANIFOLDS ARE REQUIRED (HEATER BA-1103 / COIL-4 / NORTHERN 2x MANIFOLDS)
2. FOR MATERIAL LIST SEE DOC. SA6-2143-BA1120A
3. SEE ALSO 6-2143 BOTTOM MANIFOLD REPLACEMENT PROCEDURE
4. B.E. INDICATES BEVELLED END. F.W. INDICATES FIELD WELD. S.W. INDICATES FABRICATION WELD
5. ITEMS 12002A, 12004A, 12006, 12007, 12009 TO BE CUT TO LENGTH FROM SPARE TUBES.
6. ITEMS 12011, 12012, 12015, 12017 ARE SPARE PARTS IN STOCK AT SITE
7. ITEM 12018 EXISTING PART SHALL BE REUSED
8. ITEM 12016 EXISTING PART SHALL BE USED.
9. FABRICATION, WELDING, INSPECTION ETC. TO BE AS PER TS-BA-1.4.2
10. FOR EXISTING RADIANT COIL SEE DWG. BD6-2143-BA120-1
11. FOR EXISTING CAST SUB-MANIFOLD SEE DWG. BD6-2143-BA120-2
12. FOR GENERAL ARRANGEMENT SEE DWG. BD6-2143-BA100

A
ISSUE
02-08-15

REV.	ISSUE DATE	DESCRIPTION	DESIGNED	CHECKED	SUPERVISOR	PROJ. ENG.	CHIEF ENG.
0	– –	APPROVED FOR FABRICATION	MEP	WAK			

ALL DIMENSIONS ARE IN MILLIMETRES ☒ IN INCHES ☐ UNLESS OTHERWISE NOTED.

THIRD ANGLE PROJECTION

PROJECT TITLE	: SHURTAN GAS CHEMICAL COMPL
LOCATION	: SHURTAN, REP. OF UZBEKISTAN
OWNER	: UGN
OWNER REF.	: –
CUSTOMER	: ABB GROUP CONSORTIUM
CUSTOMER REF.	: 1-0162-100
HEATERS	: SRT VI CRACKING HEATERS
ITEM NR.	: BA-1103
LHT REF NR.	: 6-2143

THIS DRAWING, INCLUDING ALL PATENTED AND PATENTABLE FEATURES AND OR CONFIDENTIAL INFORMATION, DATA AND DESIGN IS THE PROPERTY OF ABB LUMMUS HEAT TRANSFER B.V. ITS USE IS CONDITIONED UPON THE USER'S AGREEMENT NOT TO DIVULGE THE CONTENTS THEREOF NOR TO REPRODUCE THE DRAWINGS IN WHOLE OR IN PART, NOR THE MATERIAL DESCRIBED THEREON, NOR TO USE THE DRAWINGS FOR ANY PURPOSE OTHER THAN AS SPECIFICALLY PERMITTED IN WRITING BY ABB LUMMUS HEAT TRANSFER B.V.

ABB

ABB Lummus
Heat Transfer B.V.

RADIANT COIL REPAIR
HEATER BA-1103

SCALE 1:20 | SC6-2143-BA1120 | 0

"Shurtan gaz kimyo majmuasi" MCHJ MTRB xizmati O'zT.AK. FTGAZ AJ
TEXNIK TOPSHIRIQ VA TEXNIK XULOSALAR UCHUN

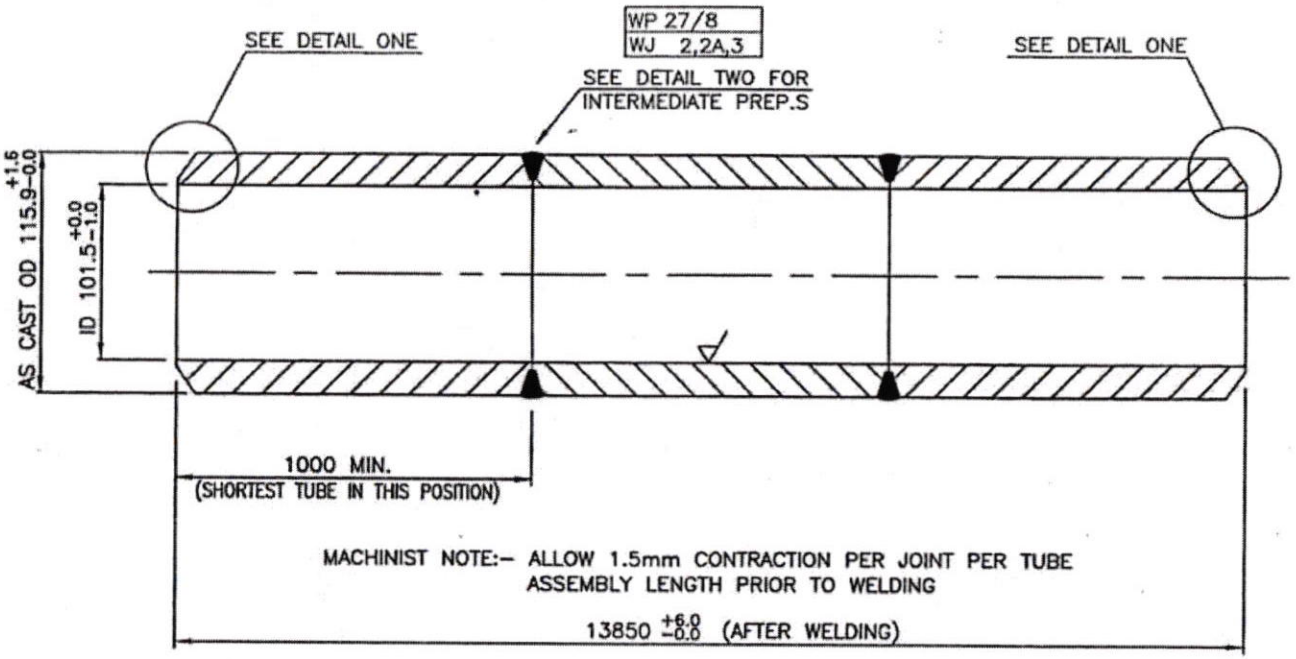

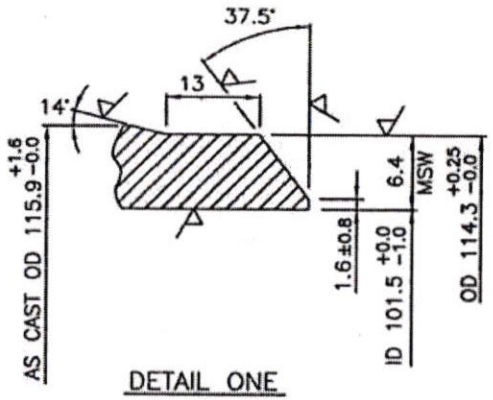

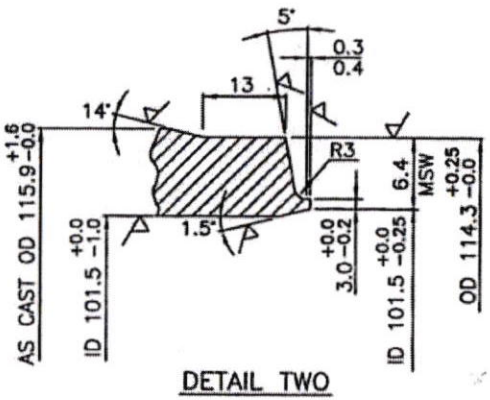

"Shurtan gaz kimyo majmuasi" MCHJ MTRB xizmati O'z. FK. FTGAZ AJ
TEXNIK TOPSHIRIQ VA TEXNIK XULOSALAR UCHUN

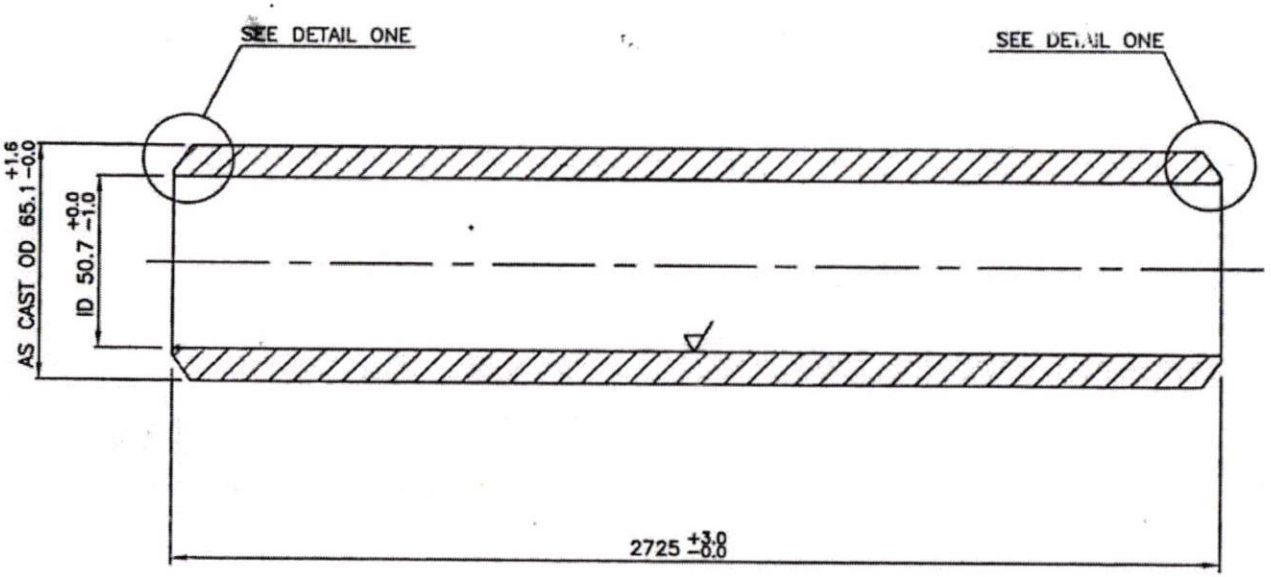

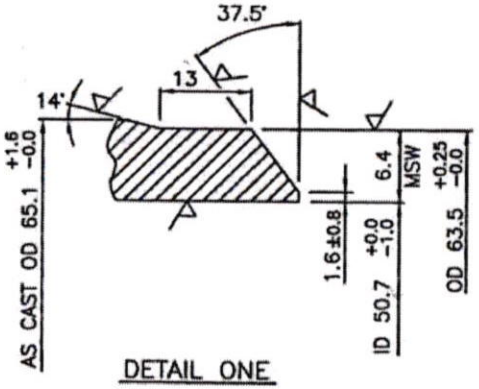

"Shurtan gaz kimyo majmuasi" MCHJ MTRB xizmati O'zT. KV. FTGAZ AJ
TEXNIK TOPSHIRIQ VA TEXNIK XULOSALAR UCHUN

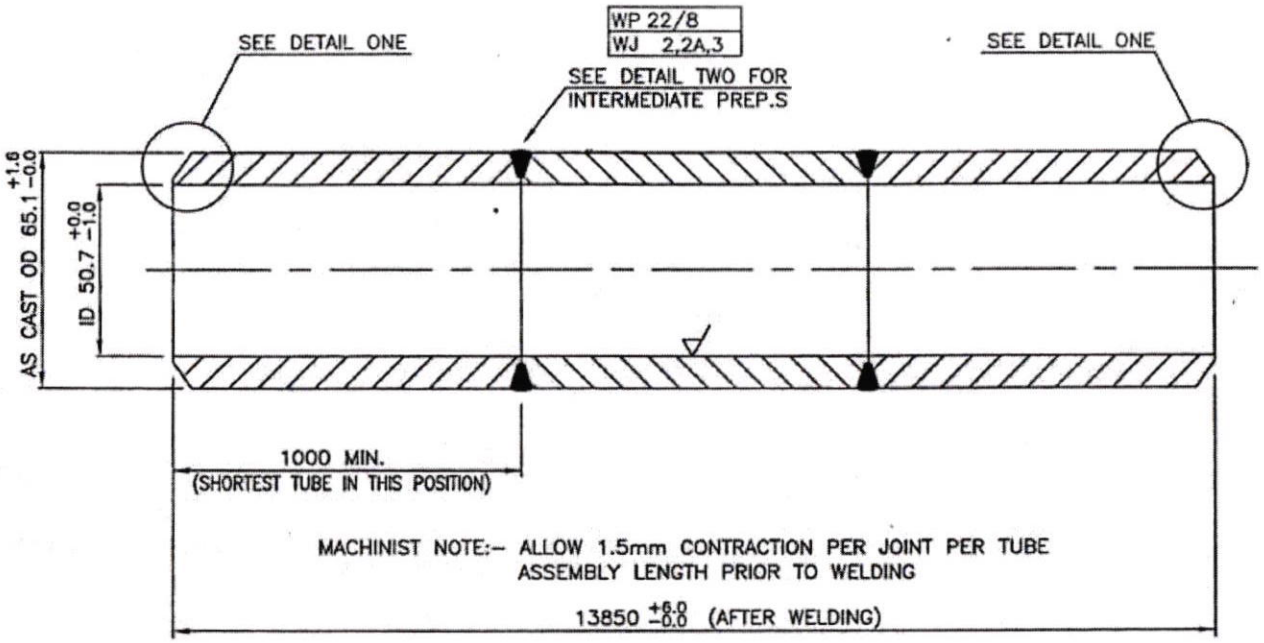

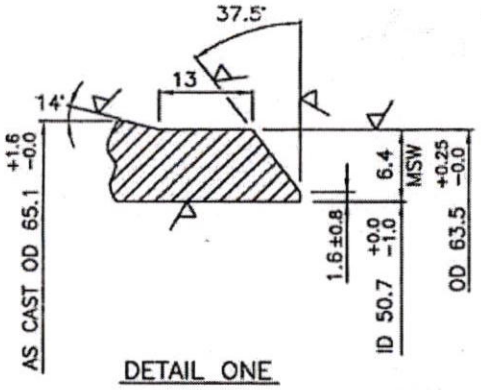

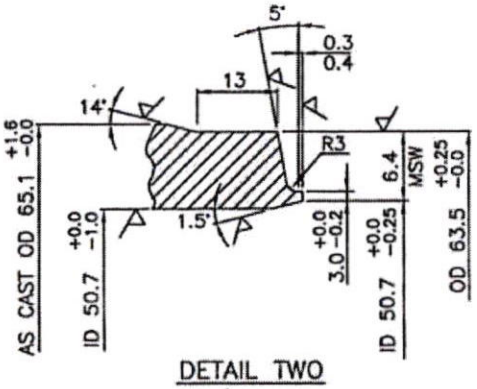

"Shurtan gaz kimyo majmuasi" MCHJ MTRB xizmati O'zR IIV STCAZ A.J.
TEXNIK TOPSHIRIQ VA TEXNIK XULOSALAR UCHUN

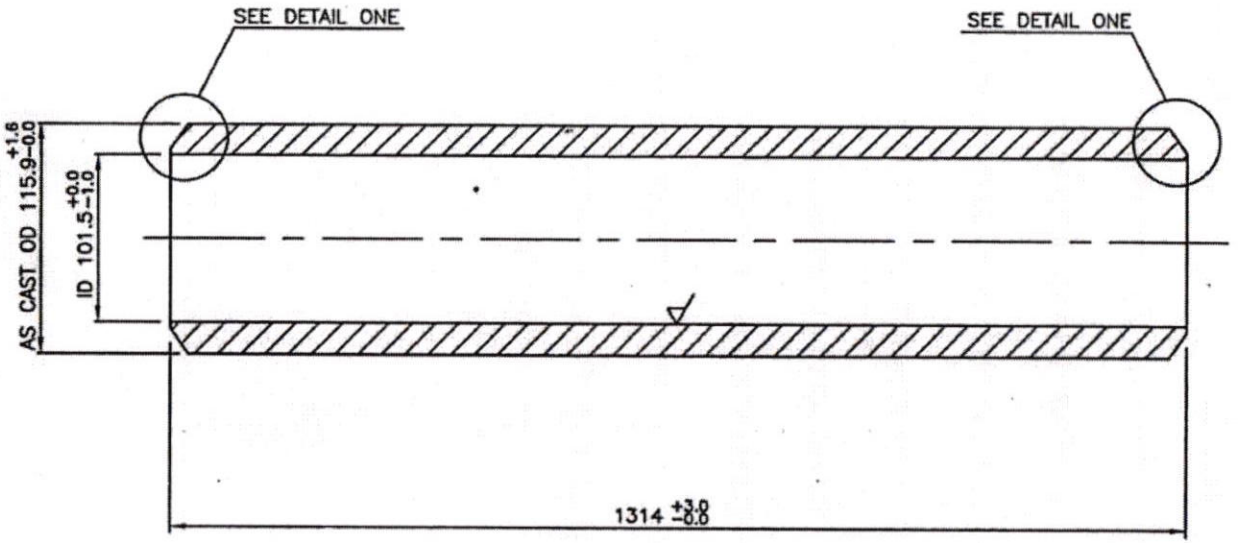

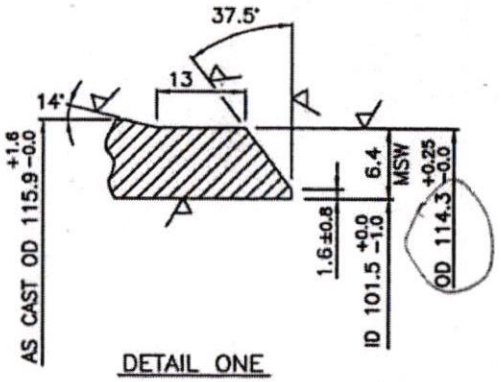

"Sun'iy gaz konyo majmuasi" MCHJ MTRB xizmati O'zb. Kn. FTGAZ AJ
TEXNIK TOPSHIRIQ VA TEXNIK XULOSALAR UCHUN